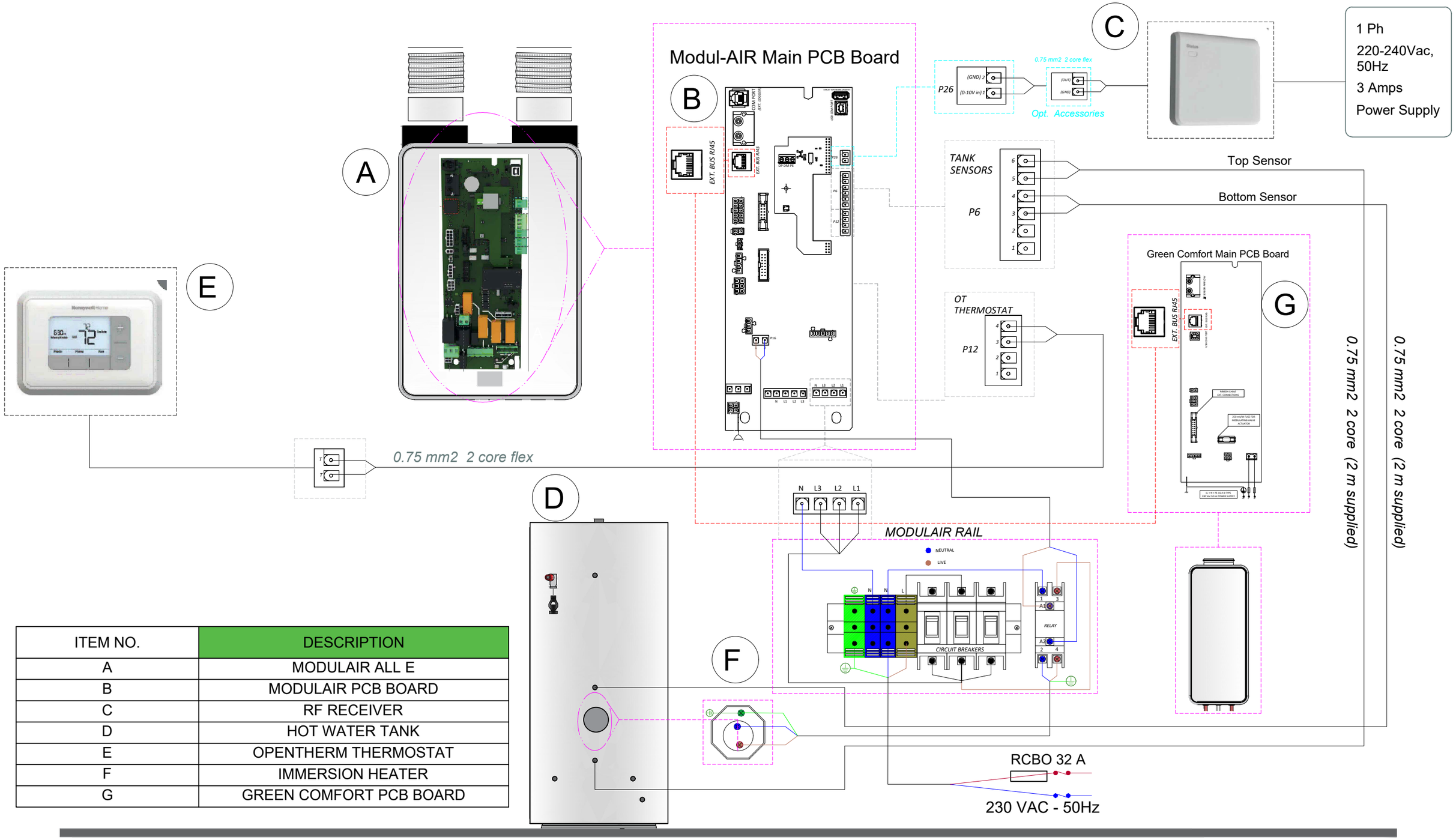

ITEM NO.	DESCRIPTION
A	MODULAIR ALL E
B	MODULAIR PCB BOARD
C	RF RECEIVER
D	HOT WATER TANK
E	OPENTHERM THERMOSTAT
F	IMMERSION HEATER
G	GREEN COMFORT PCB BOARD

Modulair All-E & GC with 1 Zone Radiators/UFH Electrical Schematic

Front View of Unit & Cylinder

CLIENT	PROJECT: ELECTRICAL SCHEMATIC	DRAWING TYPE	MODULAIR ALL E & GC 1 ZONE RADIATOR/UFH ELECTRICAL DETAILS
		DRAWING TITLE	
ON BEHALF OF: JOULE HEATING SOLUTIONS	HOUSE TYPE: EXAMPLE	DRAWING NUMBER	0000
		SCALE	1:50 @ A3
		DRAWING DATE	
		REVISION	0

joule Manufacturing Excellence